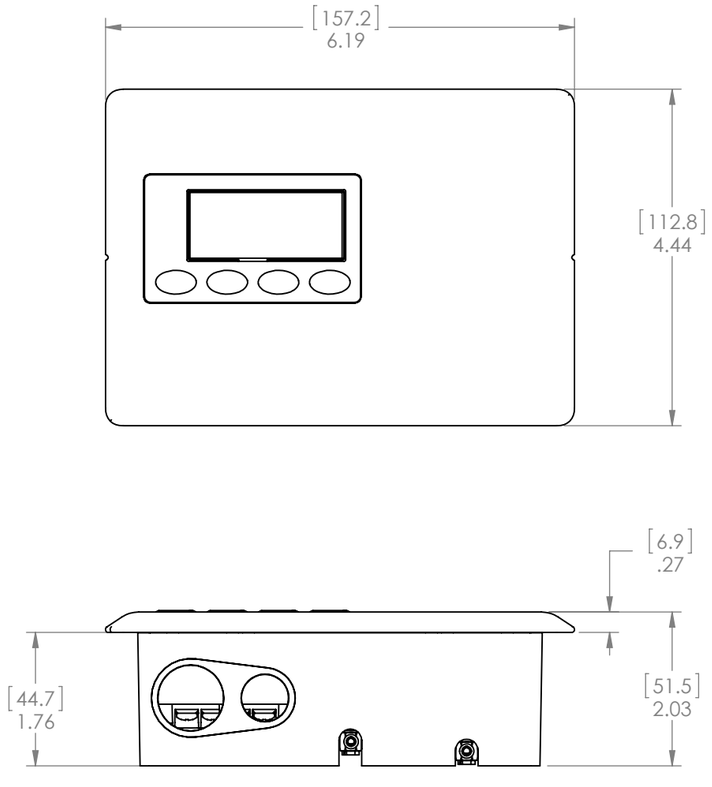

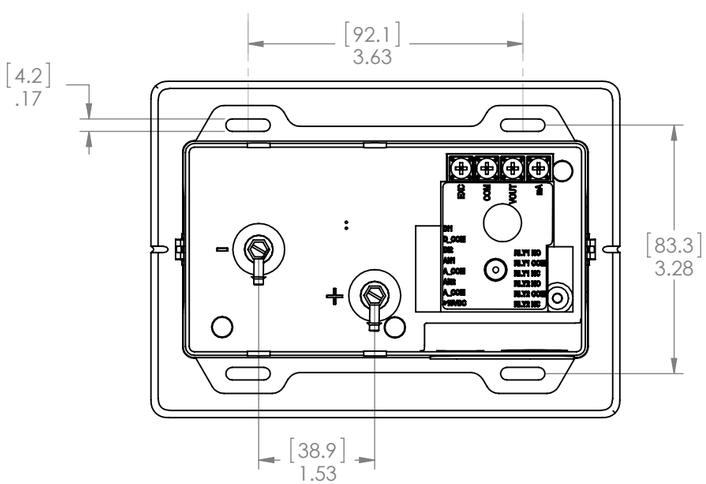

WALL MOUNT

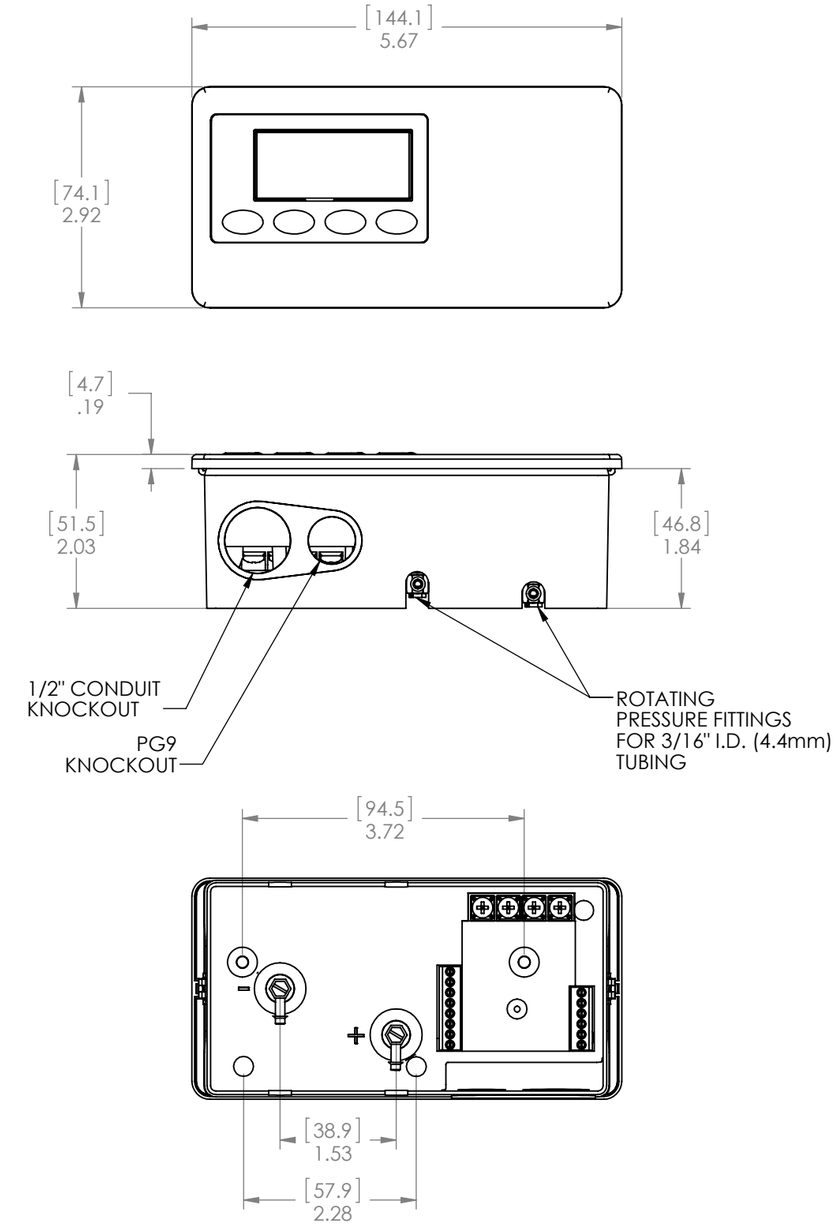

DUCT MOUNT

[mm]
in.

REVISION RECORD		APPROVALS	
REV.	DESCRIPTION	INITIALS	DATE

TOLERANCES
EXCEPT AS NOTED
DECIMAL XX = ±.01
XXX = ±.005
FRACTIONAL < 6" = ±1/32
> 6" = ±1/16
ANGULAR ± 0° 30"
DO NOT SCALE DRAWING
THIRD ANGLE PROJECTION
DWG SIZE B

© SETRA SYSTEMS, INC. THIS DRAWING CONTAINS THE PROPRIETARY INFORMATION OF SETRA SYSTEMS, INC., ALL RIGHTS RESERVED. ALL UNAUTHORIZED REPRODUCTION, USE AND TRANSMISSION OF THIS DRAWING AND INFORMATION IT CONTAINS ARE STRICTLY PROHIBITED. THIS DRAWING IS SUBJECT TO RETURN TO SETRA SYSTEMS, INC., UPON ITS REQUEST.

setra
Boxborough, MA, USA

DRAWN BY	SAINT HILAIRE	DATE	1-8-15
MATERIAL	N/A	SCALE 1:2	
ENGR		DATE	
TITLE	SALES OUTLINE SRIM2, DUCT / WALL MOUNT		
DRAWING NUMBER	SO-SRIM2DUCT-WALL	SHEET 1 of 1	REV. 1
FILE:	SO-SRIM2DUCT-WALL_1.DRW		